REVISIONS		
ISS	ZONE	DESCRIPTION\PER REQUEST\DATE

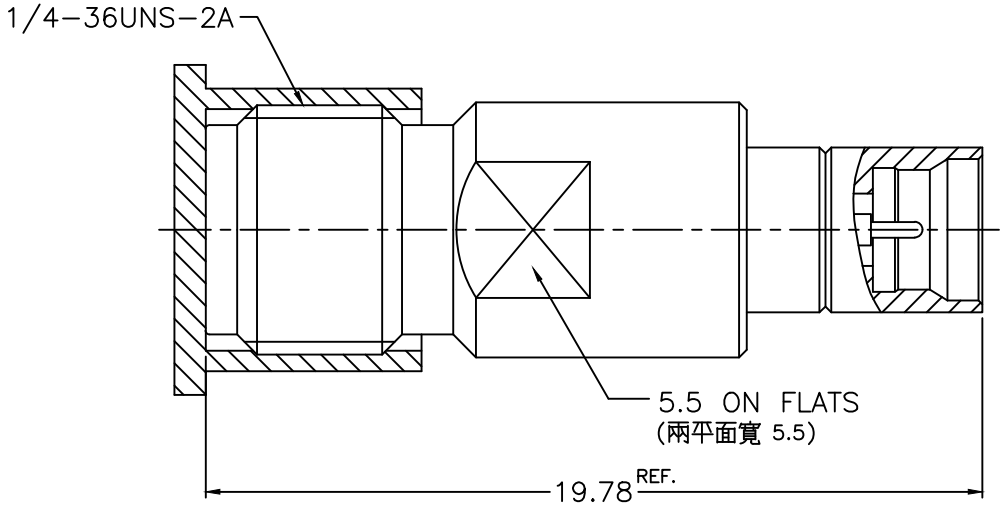

NOTES: FINISH (PLATING THICKNESS IN MICRO–INCHES)
1. BERYLLIUM COPPER
2. STAINLESS STEEL
3. PASSIVATED
4. GOLD PL. 10 MIN. THICK OVER NICKEL PL. 50 MIN. THICK OVER COPPER PL. 50 MIN. THICK
5. ULTEM 1000
6. NICKEL PL. 100 MIN. THICK OVER COPPER PL. 50 MIN. THICK
7. BRASS

RoHS COMPLIANT

NO.	DESCRIPTION	MATERIAL	FINISH	Q'TY	DRAWING NO.
5	CAP	LDPE	NATURAL		
4	BODY	NOTE 2	NOTE 3		
3	RING	NOTE 7	NOTE 6		
2	INSULATOR	NOTE 5	NATURAL		
1	CONTACT PIN	NOTE 1	NOTE 4		

DIMENSIONS ARE IN MILLIMETERS

UNLESS OTHERWISE SPECIFIED TOLERANCES
0.5–6 = ±0.2
6–30 = ±0.4
30–120 = ±0.6
120–315 = ±1
315–1000 = ±1.6
1000–2000 = ±2.4

SCALE 5/1 | ISSUE A

PART NO.

APPROVED DATE 09–07–'22

CHECKED DATE 09–07–'22

DRAWN DATE 09–07–'22

G.L.I.

TITLE
2.92mm JACK TO SMP LIMITED DETENT JACK(M) ADAPTOR

DRAWING NO.
100–292F–SMPM1–50

FILE NO. R:\D\DWG\100\292F\SMPM1\50–A