| REVISIONS | | |
|---|---|---|
| ISS | ZONE | DESCRIPTION\PER REQUEST\DATE |
| | | |

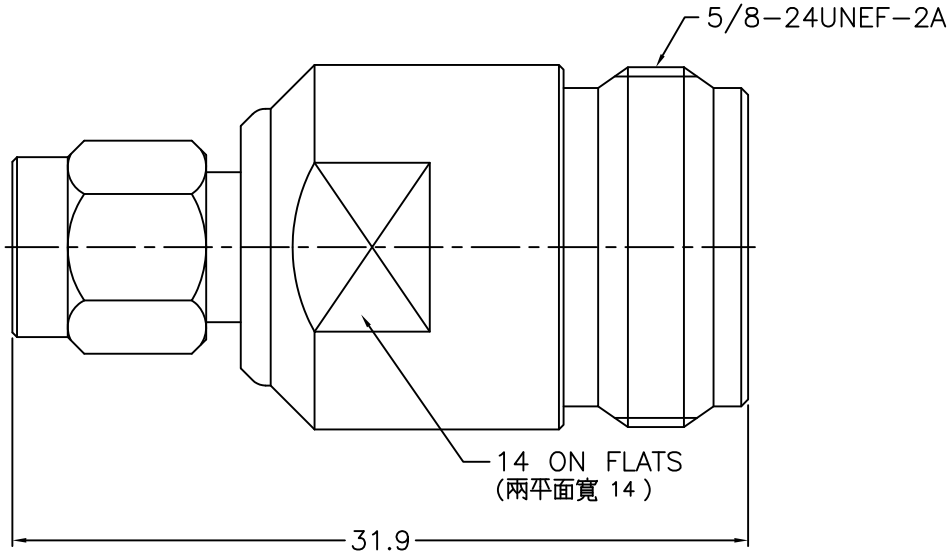


NOTES: FINISH (PLATING THICKNESS IN MICRO-INCHES)
1. BRASS
2. NICKEL PL. 100 MIN. THICK OVER COPPER PL. 50 MIN. THICK
3. PHOSPHOR BRONZE
4. GOLD PL. 3 MIN. THICK OVER NICKEL PL. 50 MIN. THICK OVER COPPER PL. 50 MIN. THICK
5. TEFLON

RoHS COMPLIANT

| NO. | DESCRIPTION | MATERIAL | FINISH | Q'TY | DRAWING NO. |
|---|---|---|---|---|---|
| 8 | INSULATOR | NOTE 5 | NATURAL | 1 | 100-NM1-SMAM-8-50T |
| 7 | SHELL | NOTE 1 | NOTE 2 | 1 | 1436-1000-1 |
| 6 | GASKET | SILICONE | RED | 1 | GS-43-60-06 |
| 5 | RETAINER RING | SUS 304 | NATURAL | 1 | 1436-1000-4 |
| 4 | BODY | NOTE 1 | NOTE 2 | 1 | 100-NF8-SMAM-4 |
| 3 | CONTACT PIN | NOTE 3 | NOTE 4 | 1 | 100-NF8-SMAM-3 |
| 2 | INSULATOR | NOTE 5 | NATURAL | 1 | 100-NM1-SMAF-2-50T |
| 1 | BODY | NOTE 1 | NOTE 2 | 1 | 100-NM1-SMAM-1 |

DIMENSIONS ARE IN MILLIMETERS

UNLESS OTHERWISE SPECIFIED TOLERANCES
0.5-6 = ±0.2
6-30 = ±0.4
30-120 = ±0.6
120-315 = ±1
315-1000 = ±1.6
1000-2000 = ±2.4

SCALE 3/1 | ISSUE 1

PART NO.

APPROVED | DATE 07-14-'16

CHECKED | DATE 07-14-'16

DRAWN GOLDEN | DATE 07-14-'16

# G.L.I.

TITLE
SMA PLUG TO N JACK ADAPTOR

DRAWING NO.
100-NF8-SMAM-50

FILE NO. R:\D\G\DWG\100\NF8-SMAM\50