REVISIONS		
ISS	ZONE	DESCRIPTION\PER REQUEST\DATE
A1	B–4	ADDED PART NO.\N/A\08–19–'21
A2	F–6	DELETE NOTE\N/A\09–01–'21

NOTE:
1. IMPEDANCE: 50 OHM
2. FREQUENCY RANGE: DC – 18 GHz
3. VSWR: 1.20 MAX.

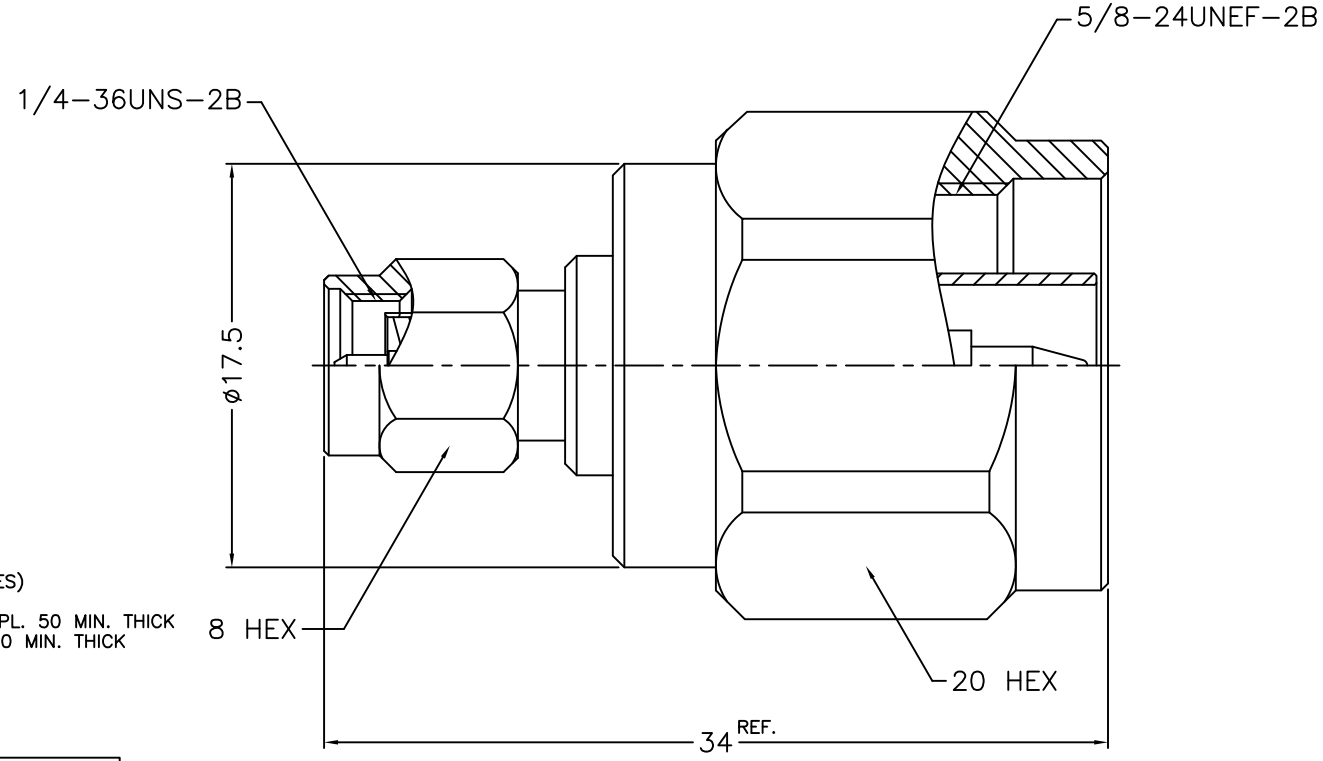

NOTES: FINISH (PLATING THICKNESS IN MICRO–INCHES)
1. BRASS
2. NICKEL PL. 100 MIN. THICK OVER COPPER PL. 50 MIN. THICK
3. GOLD PL. 3 MIN. THICK OVER NICKEL PL. 50 MIN. THICK OVER COPPER PL. 50 MIN. THICK
4. PTFE
5. PASSIVATED
6. SILICONE RUBBER

NO.	DESCRIPTION	MATERIAL	FINISH	Q'TY	DRAWING NO.
10	SHELL	NOTE 1	NOTE 2	1	5824–1000–1H
9	RETAINER RING	SUS 304	NOTE 5	1	5824–1000–7
8	GASKET	NOTE 6	RED	1	GS–80–156–15
7	SHELL	NOTE 1	NOTE 2	1	1436–1000–1
6	RETAINER RING	SUS 304	NOTE 5	1	1436–1000–4
5	GASKET	NOTE 6	RED	1	GS–43–60–06
4	CONTACT PIN	NOTE 1	NOTE 3	1	100–NM–SMAM1–4
3	INSULATOR	NOTE 4	WHITE	1	100–NF13–SMAF–2–50T
2	INNER BODY	NOTE 1	NOTE 2	1	100–NM–SMAM1–2
1	BODY	NOTE 1	NOTE 2	1	100–NM–SMAM1–1

RoHS COMPLIANT

DIMENSIONS ARE IN MILLIMETERS

UNLESS OTHERWISE SPECIFIED TOLERANCES
0.5–6 = ±0.2
6–30 = ±0.4
30–120 = ±0.6
120–315 = ±1
315–1000 = ±1.6
1000–2000 = ±2.4

SCALE 3/1 | ISSUE A2

PART NO. 644 042 032 110 00

APPROVED DATE 09–01–'21

CHECKED DATE 09–01–'21

DRAWN DATE 09–01–'21

G.L.I.

TITLE: N PLUG TO SMA PLUG ADAPTOR

DRAWING NO. 100–NM–SMAM1–50

FILE NO. R:\D\DWG\100\NM\SMAM1\50–A2