REVISIONS		
ISS	ZONE	DESCRIPTION\PER REQUEST\DATE
B	D–7	DESIGN CHANGE\RD–DM110613001\06–13–'22
B1	A–5	DELETED PART NO.\N/A\07–19–'22

FREQUENCY RANGE(GHz)	DC–18
VSWR	≤1.2

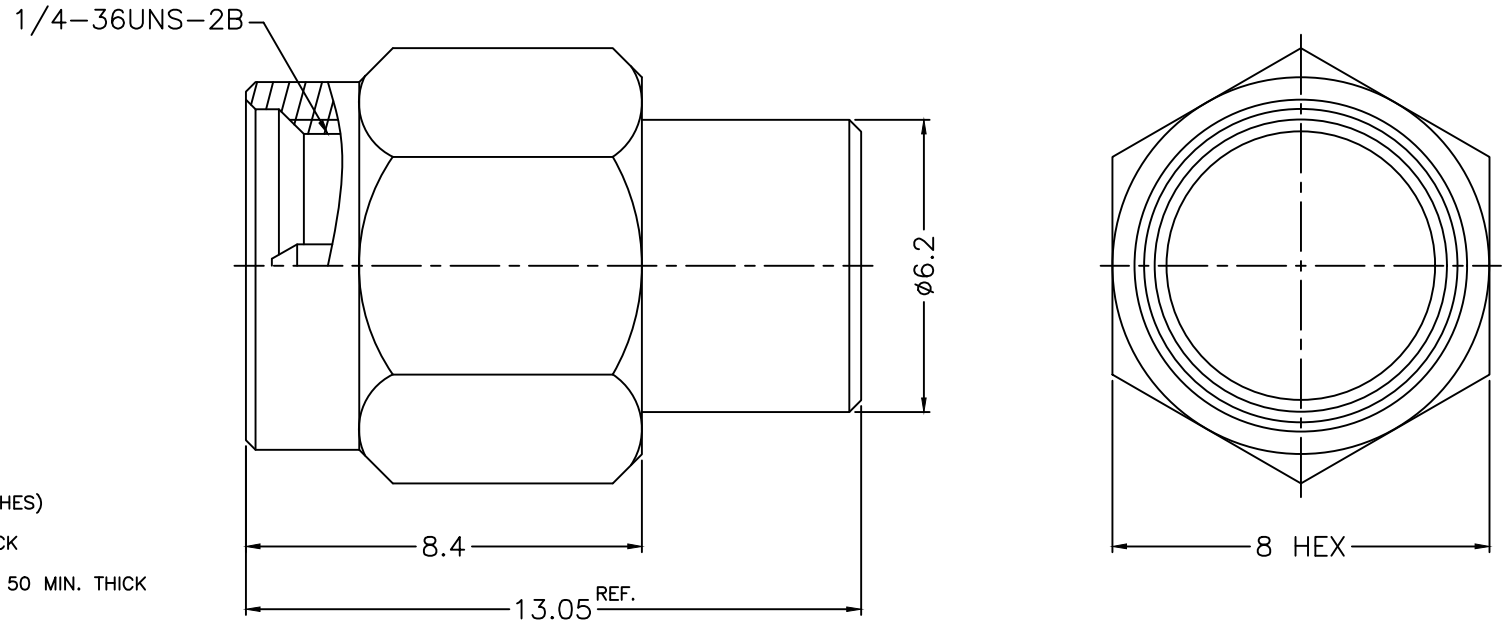

NOTES: FINISH (PLATING THICKNESS IN MICRO–INCHES)
1. BRASS
2. THIN GOLD OVER NICKEL PL. 50 MIN. THICK OVER COPPER PL. 50 MIN. THICK
3. GOLD PL. 3 MIN. THICK OVER NICKEL PL. 50 MIN. THICK OVER COPPER PL. 50 MIN. THICK
4. PTFE
5. PASSIVATED
6. SILICONE RUBBER

RoHS COMPLIANT

NO.	DESCRIPTION	MATERIAL	FINISH	Q'TY	DRAWING NO.
9	SHELL	NOTE 1	NOTE 2		
8	RETAINER RING	SUS 304	NOTE 5		
7	GASKET	NOTE 6	RED		
6	COVER	NOTE 1	NOTE 2		
5	INNER BODY	NOTE 1	NOTE 2		
4	RESISTOR	50R	NATURAL		
3	CONTACT PIN	NOTE 1	NOTE 3		
2	INSULATOR	NOTE 4	NATURAL		
1	BODY	NOTE 1	NOTE 2		

DIMENSIONS ARE IN MILLIMETERS

UNLESS OTHERWISE SPECIFIED TOLERANCES
0.5–6 = ±0.2
6–30 = ±0.4
30–120 = ±0.6
120–315 = ±1
315–1000 = ±1.6
1000–2000 = ±2.4

SCALE	6/1	ISSUE	B1

PART NO.

APPROVED	DATE	07–19–'22
CHECKED	DATE	07–19–'22
DRAWN	DATE	07–19–'22

G.L.I.

TITLE
SMA TERMINATOR PLUG

DRAWING NO.
1436–1004A8S–50

FILE NO. R:\D\DWG\1436\1004A8S\50–B1