REVISIONS		
ISS	ZONE	DESCRIPTION\PER REQUEST\DATE

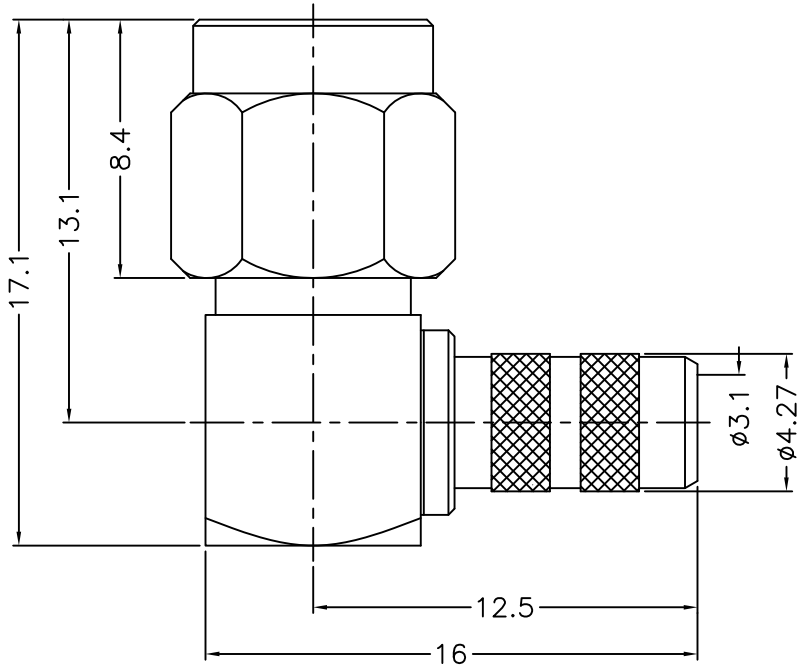

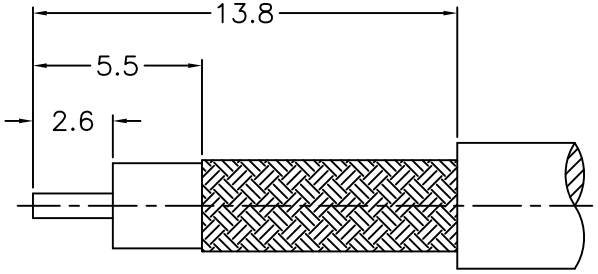

RECOMMENDED
CABLE STRIPPING DIM'S
（建議剝線尺寸）

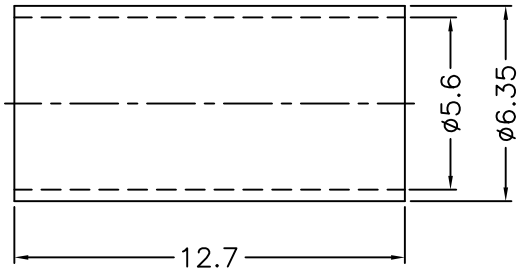

NOTES: FINISH (PLATING THICKNESS IN MICRO-INCHES)
1. BRASS
2. THIN GOLD OVER NICKEL PL. 50 MIN. THICK OVER COPPER PL. 50 MIN. THICK
3. GOLD PL. 3 MIN. THICK OVER NICKEL PL. 50 MIN. THICK OVER COPPER PL. 50 MIN. THICK
4. TEFLON

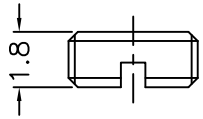

1. CRIMPED FERRULE
HEX CRIMP SIZE .213"
2. CONTACT PIN TO SOLDER

NO.	DESCRIPTION	MATERIAL	FINISH	Q'TY	DRAWING NO.
8	FERRULE	NOTE 1	NOTE 2	1	FR-56-635-127
7	COVER	NOTE 1	NOTE 2	1	NUT-4204-18
6	GASKET	SILICONE	RED	1	GS-43-60-06
5	RETAINER RING	SUS 303	NATURAL	1	1436-1000-4
4	CONTACT PIN	NOTE 1	NOTE 3	1	1436-1112A4-4
3	INSULATOR	NOTE 4	NATURAL	1	1436-1112A4-3 -50T
2	HOUSING WITH BARREL	NOTE 1	NOTE 2	1	1436-1112A4-2 -06
1	SHELL	NOTE 1	NOTE 2	1	1436-1000-1

DIMENSIONS ARE IN MILLIMETERS

UNLESS OTHERWISE SPECIFIED TOLERANCES
0.5-6 = ±0.2
6-30 = ±0.4
30-120 = ±0.6
120-315 = ±1
315-1000 = ±1.6
1000-2000 = ±2.4

SCALE 4/1 | ISSUE A

PART NO.

APPROVED DATE 08-28-'13

CHECKED DATE 08-28-'13

DRAWN DATE 08-28-'13

G.L.I.

TITLE SMA R/A CRIMP PLUG (FOR RG-55, 142, 223, 400)

DRAWING NO. 1436-1112A4-07-50

FILE NO. R:\D\G\DWG\1436\1112A4\07\50