REVISIONS		
ISS	ZONE	DESCRIPTION\PER REQUEST\DATE

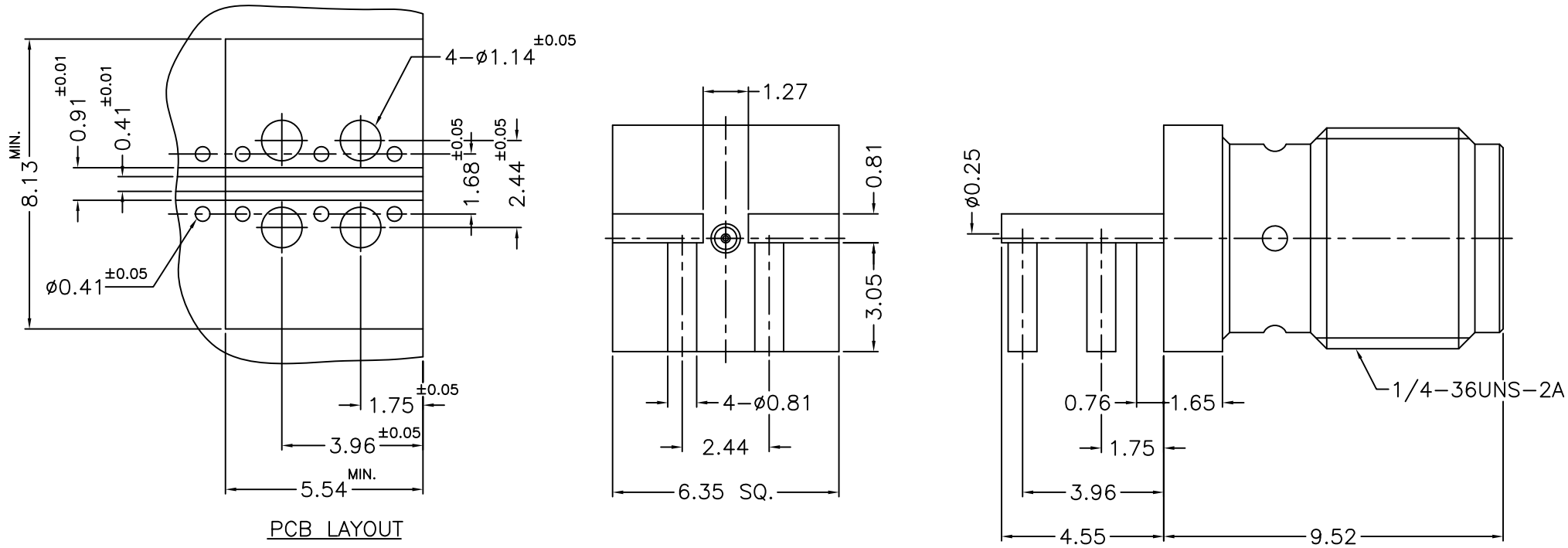

NOTES: FINISH (PLATING THICKNESS IN MICRO–INCHES)
1. BRASS
2. GOLD PL. 3 MIN. THICK OVER NICKEL PL. 50 MIN. THICK OVER COPPER PL. 50 MIN. THICK
3. BERYLLIUM COPPER
4. GOLD PL. 30 MIN. THICK OVER NICKEL PL. 50 MIN. THICK OVER COPPER PL. 50 MIN. THICK
5. TEFLON

RoHS COMPLIANT

NO.	DESCRIPTION	MATERIAL	FINISH	Q'TY	DRAWING NO.
3	CONTACT PIN	NOTE 3	NOTE 4	1	1436–6252S7–3
2	INSULATOR	NOTE 5	NATURAL	1	1436–6252S7–2 –50T
1	BODY	NOTE 1	NOTE 2	1	1436–6252S7–1

DIMENSIONS ARE IN MILLIMETERS

UNLESS OTHERWISE SPECIFIED TOLERANCES
0.5–6 = ±0.2
6–30 = ±0.4
30–120 = ±0.6
120–315 = ±1
315–1000 = ±1.6
1000–2000 = ±2.4

SCALE 6/1 ISSUE 1

PART NO.

APPROVED DATE 10–16–'17

CHECKED DATE 10–16–'17

DRAWN ANGELA DATE 10–16–'17

G.L.I.

TITLE SMA END LAUNCH JACK

DRAWING NO. 1436–6252S7–50

FILE NO. R:\D\G\DWG\1436\6252S7\50