REVISIONS		
ISS	ZONE	DESCRIPTION\PER REQUEST\DATE
B	A–2	NO.5 WAS CHANGED\RD–DM090120001\01–21–'20
C	A–2	NO.4 WAS CHANGED\RD–DM090806001\08–06–'20
	A–2	NO.5 WAS CHANGED\RD–DM090806002\08–06–'20

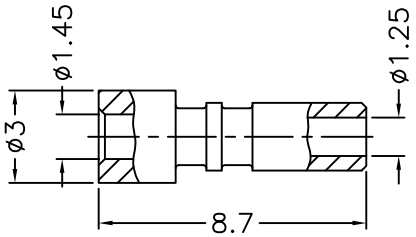

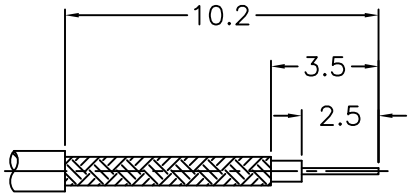

RECOMMENDED
CABLE STRIPPING DIM'S
（建議剝線尺寸）

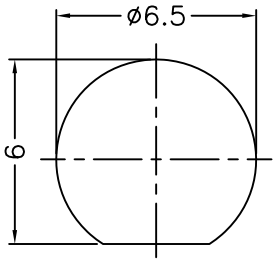

RECOMMENDED
MOUNTING HOLE
（建議架設孔）

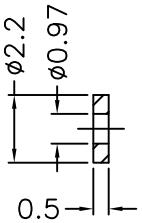

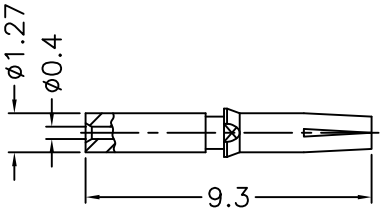

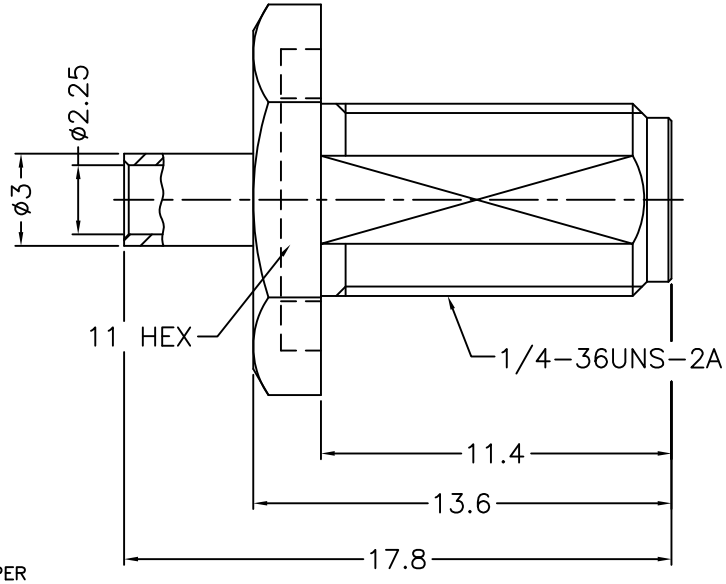

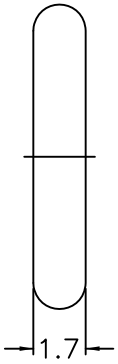

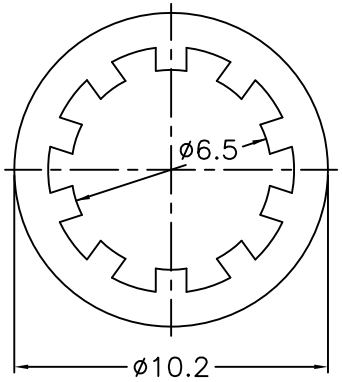

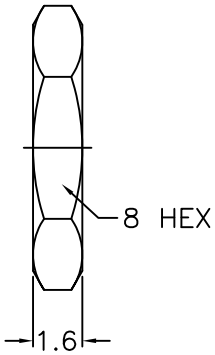

NOTES: FINISH (PLATING THICKNESS IN MICRO–INCHES)
1. BRASS
2. THIN GOLD OVER NICKEL PL. 50 MIN. THICK OVER COPPER PL. 50 MIN. THICK
3. BERYLLIUM COPPER
4. GOLD PL. 3 MIN. THICK OVER NICKEL PL. 50 MIN. THICK OVER COPPER PL. 50 MIN. THICK
5. PTFE

RoHS COMPLIANT

1. CRIMPED FERRULE
   HEX CRIMP SIZE .1"
2. CONTACT PIN TO SOLDER
3. MAX. PANEL THICKNESS=2.4mm

NO.	DESCRIPTION	MATERIAL	FINISH	Q'TY	DRAWING NO.
8	HEX NUT	NOTE 1	NOTE 2		
7	LOCK WASHER	NOTE 1	NOTE 2		
6	GASKET	SILICONE	RED		
5	FERRULE	NOTE 1	NOTE 2		
4	INSULATOR	NOTE 5	NATURAL		
3	CONTACT PIN	NOTE 3	NOTE 4		
2	INSULATOR	NOTE 5	NATURAL		
1	BODY	NOTE 1	NOTE 2		

DIMENSIONS ARE IN MILLIMETERS

UNLESS OTHERWISE SPECIFIED TOLERANCES
0.5–6 = ±0.2
6–30 = ±0.4
30–120 = ±0.6
120–315 = ±1
315–1000 = ±1.6
1000–2000 = ±2.4

SCALE 4/1 ISSUE C

PART NO.

APPROVED DATE 08–06–'20

CHECKED DATE 08–06–'20

DRAWN DATE 08–06–'20

G.L.I.

TITLE SMA BULKHEAD JACK (FOR 1.37 O.D MICRO–CABLE)

DRAWING NO. 1436–6411U4–32–50

FILE NO. R:\D\DWG\1436\6411U4\32\50–C