REVISIONS		
ISS	ZONE	DESCRIPTION\PER REQUEST\DATE
B	B-2	NO.5 WAS CHANGED\RD-DM090120001\02-20-'20

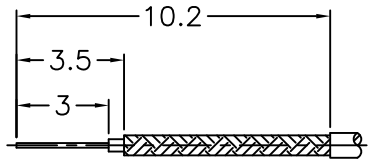

RECOMMENDED
CABLE STRIPPING DIM'S
(建議剝線尺寸)

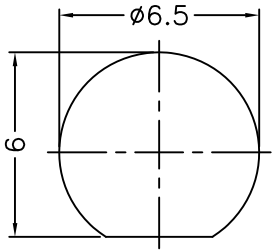

RECOMMENDED
MOUNTING HOLE
(建議架設孔)

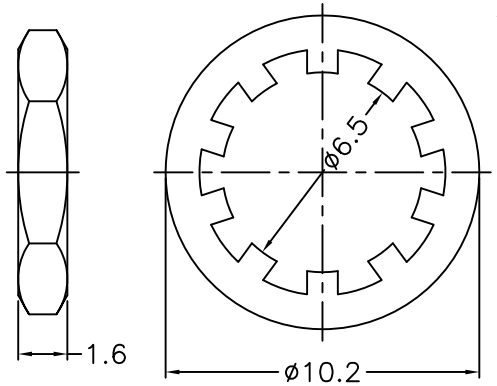

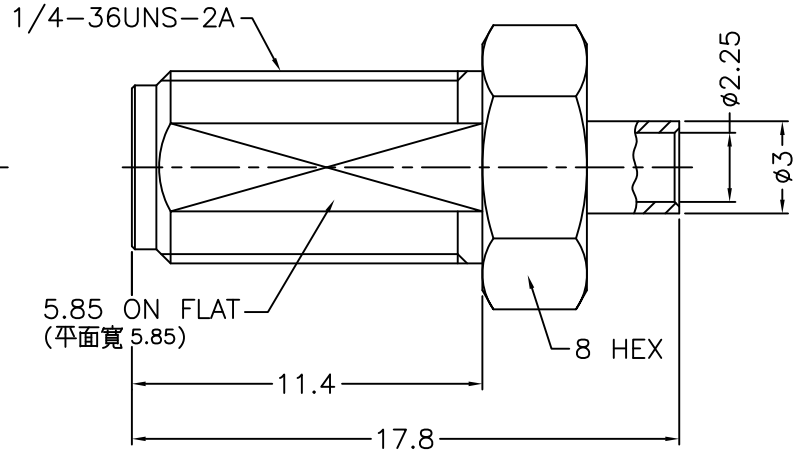

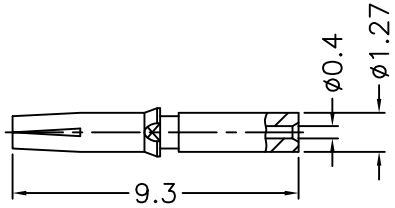

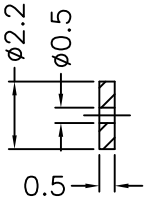

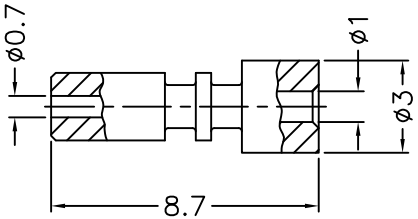

1. CRIMPED FERRULE
   HEX CRIMP SIZE .1"
2. CONTACT PIN TO SOLDER
3. MAX. PANEL THICKNESS=3.2mm

RoHS COMPLIANT

NOTES: FINISH (PLATING THICKNESS IN MICRO-INCHES)
1. BRASS
2. THIN GOLD OVER NICKEL PL. 50 MIN. THICK OVER COPPER PL. 50 MIN. THICK
3. BERYLLIUM COPPER
4. GOLD PL. 3 MIN. THICK OVER NICKEL PL. 50 MIN. THICK OVER COPPER PL. 50 MIN. THICK
5. PTFE

NO.	DESCRIPTION	MATERIAL	FINISH	Q'TY	DRAWING NO.
7	HEX NUT	NOTE 1	NOTE 2		
6	LOCK WASHER	NOTE 1	NOTE 2		
5	FERRULE	NOTE 1	NOTE 2		
4	INSULATOR	NOTE 5	NATURAL		
3	CONTACT PIN	NOTE 3	NOTE 4		
2	INSULATOR	NOTE 5	NATURAL		
1	BODY	NOTE 1	NOTE 2		

DIMENSIONS ARE IN MILLIMETERS

UNLESS OTHERWISE SPECIFIED TOLERANCES
0.5-6 = ±0.2
6-30 = ±0.4
30-120 = ±0.6
120-315 = ±1
315-1000 = ±1.6
1000-2000 = ±2.4

SCALE 4/1 | ISSUE B

PART NO.

APPROVED DATE 02-20-'20

CHECKED DATE 02-20-'20

DRAWN DATE 02-20-'20

G.L.I.

TITLE
SMA BULKHEAD JACK
(FOR 0.81 O.D MICRO-CABLE)

DRAWING NO.
1436-6411U5-A1-50

FILE NO. R:\D\DWG\1436\6411U5\A1\50-B