| REVISIONS | | |
|---|---|---|
| ISS | ZONE | DESCRIPTION\PER REQUEST\DATE |
| | | |

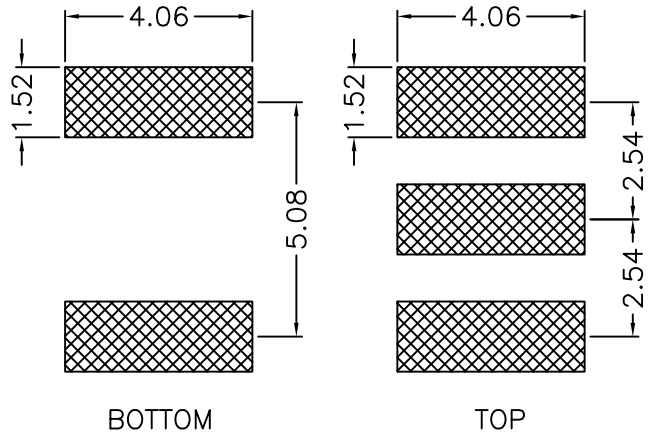


PCB MOUNTING HOLE
（印刷電路板架設孔）

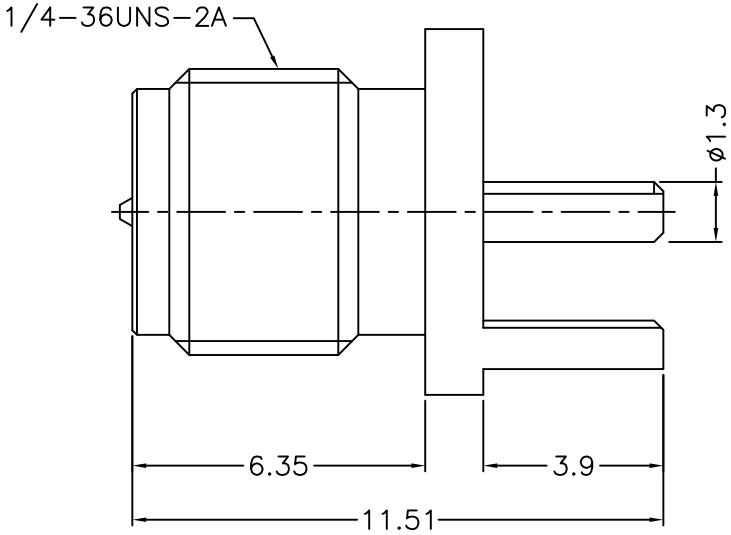


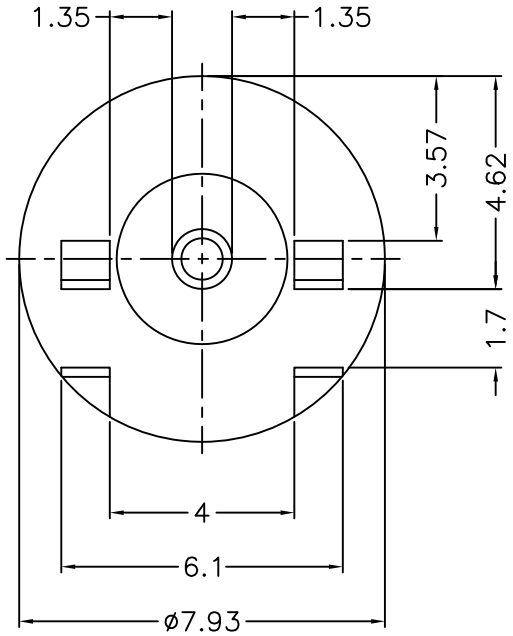


NOTES: FINISH (PLATING THICKNESS IN MICRO-INCHES)
1. BRASS
2. NICKEL PL. 100 MIN. THICK OVER COPPER PL. 50 MIN. THICK
3. GOLD PL. 3 MIN. THICK OVER NICKEL PL. 50 MIN. THICK OVER COPPER PL. 50 MIN. THICK
4. TEFLON

RoHS COMPLIANT

| NO. | DESCRIPTION | MATERIAL | FINISH | Q'TY | DRAWING NO. |
|---|---|---|---|---|---|
| 3 | CONTACT PIN | NOTE 1 | NOTE 3 | 1 | 1436RP-6251S13-3 |
| 2 | INSULATOR | NOTE 4 | NATURAL | 1 | 1436RP-6251S13-2-50T |
| 1 | BODY | NOTE 1 | NOTE 2 | 1 | 1436RP-6251S13-1 |

DIMENSIONS ARE IN MILLIMETERS

UNLESS OTHERWISE SPECIFIED TOLERANCES
0.5-6 = ±0.2
6-30 = ±0.4
30-120 = ±0.6
120-315 = ±1
315-1000 = ±1.6
1000-2000 = ±2.4

SCALE 6/1 | ISSUE A

PART NO.

APPROVED | DATE 03-06-'15

CHECKED | DATE 03-06-'15

DRAWN ANGELA | DATE 03-06-'15

# G.L.I.

TITLE: SMA REVERSE POLARITY EDGECARD MOUNT JACK

DRAWING NO. 1436RP-6251S13-50

FILE NO. R:\D\G\DWG\1436\RP\6251S13\50