REVISIONS		
ISS	ZONE	DESCRIPTION\PER REQUEST\DATE
B	A–2	NO.5 WAS CHANGED\RD–DM090421001\04–21–'20

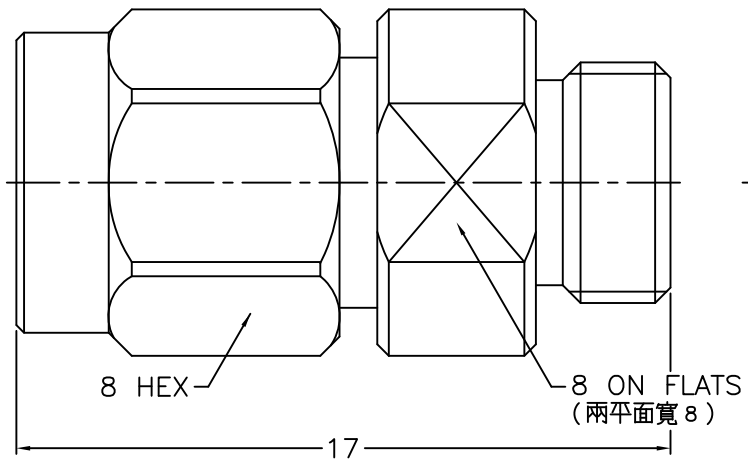

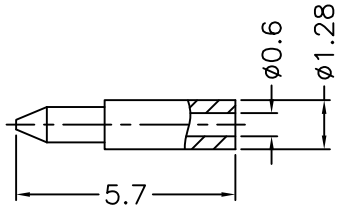

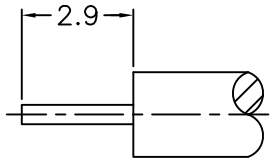

RECOMMENDED
CABLE STRIPPING DIM'S
(建議剝線尺寸)

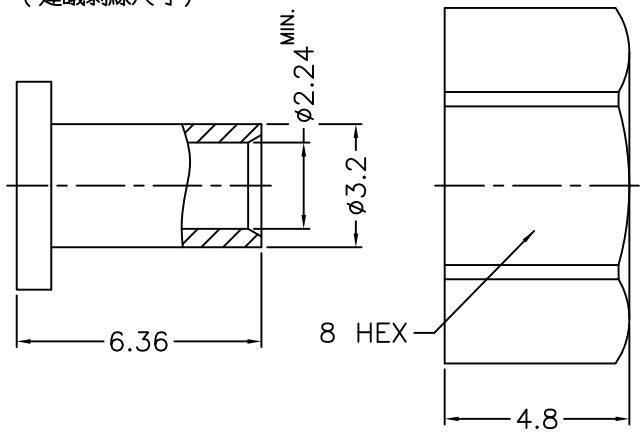

NOTES: FINISH (PLATING THICKNESS IN MICRO–INCHES)
1. BRASS
2. BERYLLIUM COPPER
3. GOLD PL. 3 MIN. THICK OVER NICKEL PL. 50 MIN. THICK OVER COPPER PL. 50 MIN. THICK
4. GOLD PL. 10 MIN. THICK OVER NICKEL PL. 50 MIN. THICK OVER COPPER PL. 50 MIN. THICK
5. STAINLESS STEEL
6. PASSIVATED
7. ULTEM 1000
8. PTFE
9. NICKEL PL. 100 MIN. THICK OVER COPPER PL. 50 MIN. THICK

NO.	DESCRIPTION	MATERIAL	FINISH	Q'TY	DRAWING NO.
10	NUT	NOTE 5	NOTE 6		
9	BRAID HOLDER	NOTE 1	NOTE 3		
8	INSULATOR	NOTE 8	NATURAL		
7	CONTACT PIN	NOTE 1	NOTE 3		
6	SHELL	NOTE 5	NOTE 6		
5	RETAINER RING	NOTE 2	NOTE 9		
4	RING	NOTE 5	NOTE 6		
3	INSULATOR	NOTE 7	NATURAL		
2	CONTACT PIN	NOTE 2	NOTE 4		
1	BODY	NOTE 5	NOTE 6		

RoHS COMPLIANT

DIMENSIONS ARE IN MILLIMETERS

UNLESS OTHERWISE SPECIFIED TOLERANCES
0.5–6 = ±0.2
6–30 = ±0.4
30–120 = ±0.6
120–315 = ±1
315–1000 = ±1.6
1000–2000 = ±2.4

SCALE 5/1 | ISSUE B

PART NO.

APPROVED DATE 04–21–'20

CHECKED DATE 04–21–'20

DRAWN DATE 04–21–'20

G.L.I.

TITLE
2.92mm DIRECT SOLDER PLUG
(FOR .085, .086, RG–405/U CABLE)

DRAWING NO. 292–1181S1–28–50

FILE NO. R:\D\DWG\292\1181S1\28\50–B