REVISIONS		
ISS	ZONE	DESCRIPTION\PER REQUEST\DATE

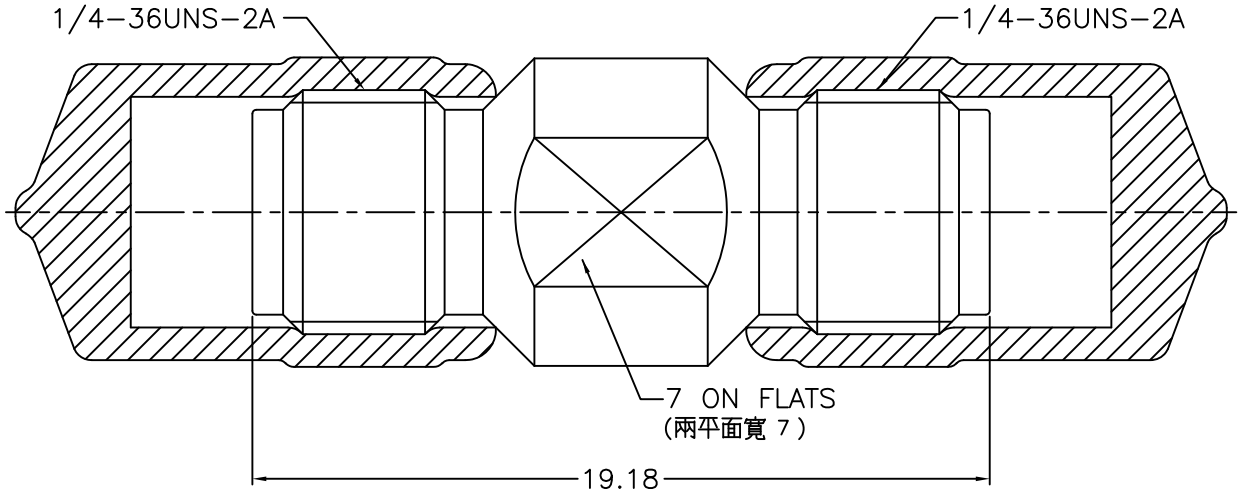

NOTES: FINISH (PLATING THICKNESS IN MICRO-INCHES)
1. BERYLLIUM COPPER
2. STAINLESS STEEL
3. PASSIVATED
4. GOLD PL. 10 MIN. THICK OVER NICKEL PL. 50 MIN. THICK OVER COPPER PL. 50 MIN. THICK
5. ULTEM 1000

RoHS COMPLIANT

NO.	DESCRIPTION	MATERIAL	FINISH	Q'TY	DRAWING NO.
5	PROTECTIVE COVER	PVC	DARK BLUE		
4	BODY	NOTE 2	NOTE 3		
3	RING	NOTE 2	NOTE 3		
2	INSULATOR	NOTE 5	NATURAL		
1	CONTACT PIN	NOTE 1	NOTE 4		

DIMENSIONS ARE IN MILLIMETERS

UNLESS OTHERWISE SPECIFIED TOLERANCES
0.5–6 = ±0.2
6–30 = ±0.4
30–120 = ±0.6
120–315 = ±1
315–1000 = ±1.6
1000–2000 = ±2.4

SCALE 5/1 | ISSUE A

PART NO.

APPROVED | DATE 12-24-'20

CHECKED | DATE 12-24-'20

DRAWN | DATE 12-24-'20

G.L.I.

TITLE
3.5mm JACK TO JACK ADAPTOR

DRAWING NO.
35-7071S2-50

FILE NO. R:\D\DWG\35\7071S2\50-A