REVISIONS		
ISS	ZONE	DESCRIPTION\PER REQUEST\DATE

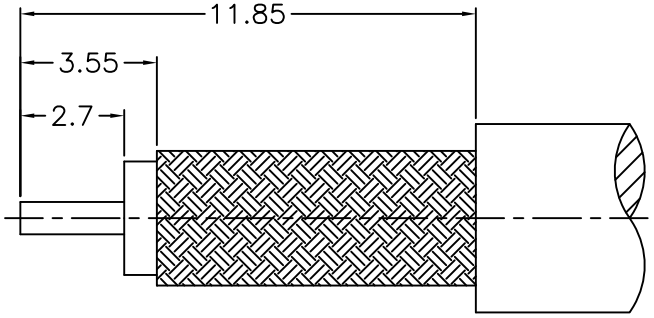

RECOMMENDED
CABLE STRIPPING DIM'S
（建議剝線尺寸）

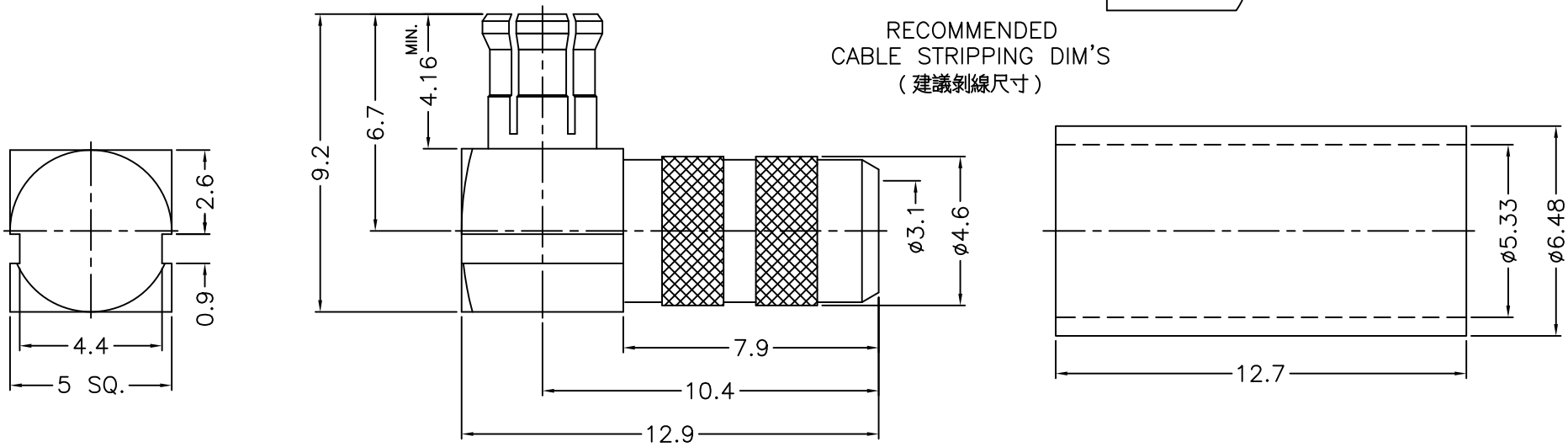

NOTES: FINISH (PLATING THICKNESS IN MICRO-INCHES)
1. BRASS
2. NICKEL PL. 100 MIN. THICK OVER COPPER PL. 50 MIN. THICK
3. BERYLLIUM COPPER
4. GOLD PL. 3 MIN. THICK OVER NICKEL PL. 50 MIN. THICK OVER COPPER PL. 50 MIN. THICK
5. TEFLON

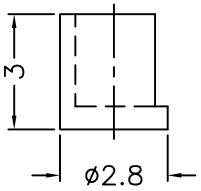

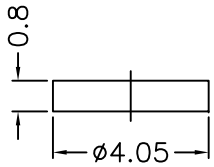

RoHS COMPLIANT

1. CRIMPED FERRULE
   HEX CRIMP SIZE .213"
2. CONTACT PIN TO SOLDER

NO.	DESCRIPTION	MATERIAL	FINISH	Q'TY	DRAWING NO.
7	FERRULE	COPPER	NOTE 2	1	FR-533-648 -127C
6	COVER	NOTE 1	NOTE 2	1	CV-405-08
5	INSULATOR	DELRIN	NATURAL	1	400-1182A1-5D
4	CONTACT PIN	NOTE 1	NOTE 4	1	400-1112A1-4 -1.1
3	INSULATOR	NOTE 5	NATURAL	1	400-1112A1-3 -50T
2	BODY	NOTE 3	NOTE 2	1	400-1182A1-2
1	HOUSING	NOTE 1	NOTE 2	1	400-1112B4-1 -06

DIMENSIONS ARE IN MILLIMETERS

UNLESS OTHERWISE SPECIFIED TOLERANCES
0.5-6 = ±0.2
6-30 = ±0.4
30-120 = ±0.6
120-315 = ±1
315-1000 = ±1.6
1000-2000 = ±2.4

SCALE 5/1 | ISSUE 1

PART NO.

APPROVED | DATE 12-20-'16

CHECKED | DATE 12-20-'16

DRAWN ANGELA | DATE 12-20-'16

G.L.I.

TITLE
MCX R/A CRIMP PLUG
(FOR RG-58, 58A, 141 CABLE)

DRAWING NO.
400-1112B4-06-50

FILE NO. R:\D\G\DWG\400\1112B4\06\50