REVISIONS		
ISS	ZONE	DESCRIPTION\PER REQUEST\DATE

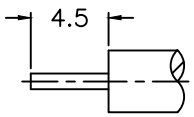

RECOMMENDED
CABLE STRIPPING DIM'S
（建議剝線尺寸）

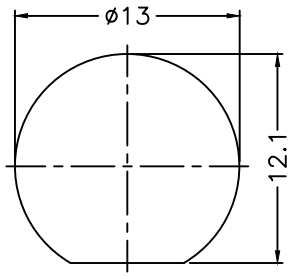

RECOMMENDED
MOUNTING HOLE
（建議架設孔）

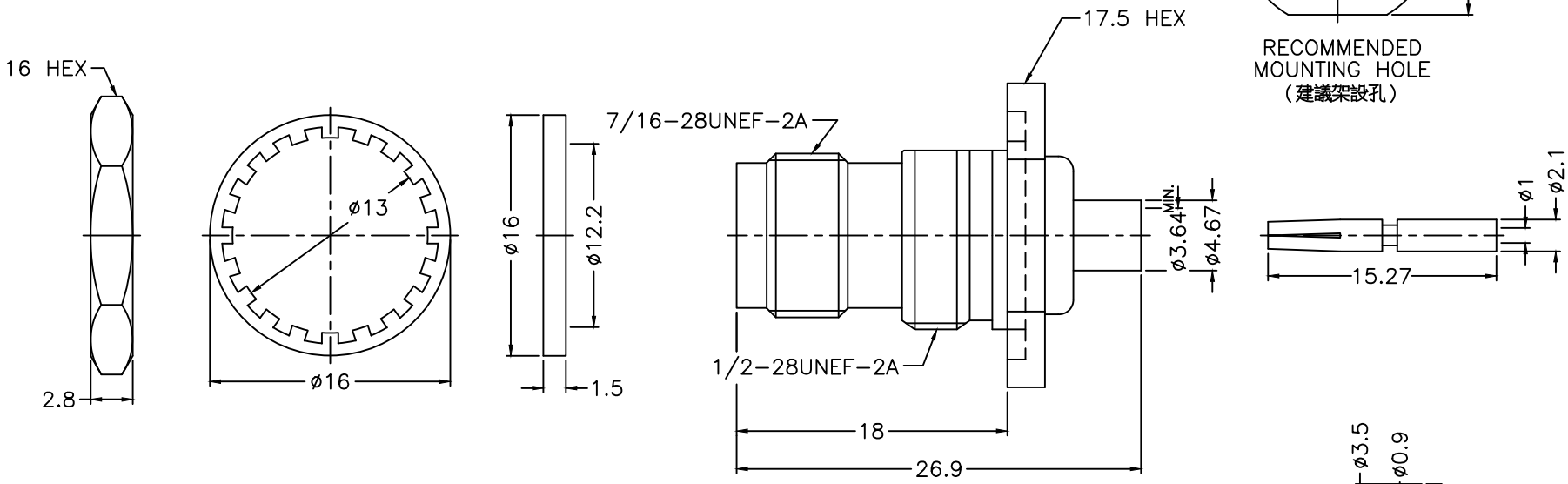

NOTES: FINISH (PLATING THICKNESS IN MICRO-INCHES)
1. BRASS
2. NICKEL PL. 100 MIN. THICK OVER COPPER PL. 50 MIN. THICK
3. THIN GOLD OVER NICKEL PL. 50 MIN. THICK OVER COPPER PL. 50 MIN. THICK
4. PHOSPHOR BRONZE
5. GOLD PL. 3 MIN. THICK OVER NICKEL PL. 50 MIN. THICK OVER COPPER PL. 50 MIN. THICK
6. TEFLON

RoHS COMPLIANT

NO.	DESCRIPTION	MATERIAL	FINISH	Q'TY	DRAWING NO.
9	INSULATOR	NOTE 6	NATURAL	1	5824-6481A1-5T-0.9
8	CONTACT PIN	NOTE 4	NOTE 5	1	900-6481A1-8-1.0
7	HEX NUT	NOTE 1	NOTE 2	1	HN-16-1228-28
6	LOCK WASHER	NOTE 1	NOTE 2	1	LW-13-16-05
5	GASKET	RUBBER	RED	1	GS-122-160-15
4	BARREL	NOTE 1	NOTE 3	1	900-6481A1-4-29
3	INSULATOR	NOTE 6	NATURAL	1	900-6481A1-3-50T
2	BODY	NOTE 1	NOTE 2	1	71628RP-6121A1-2
1	HOUSING	NOTE 1	NOTE 2	1	900-6421E1-1

DIMENSIONS ARE IN MILLIMETERS

UNLESS OTHERWISE SPECIFIED TOLERANCES
0.5-6 = ±0.2
6-30 = ±0.4
30-120 = ±0.6
120-315 = ±1
315-1000 = ±1.6
1000-2000 = ±2.4

SCALE 2.5/1 | ISSUE 1

PART NO.

APPROVED | DATE 01-07-'16

CHECKED | DATE 01-07-'16

DRAWN ANGELA | DATE 01-07-'16

G.L.I.

TITLE
TNC BULKHEAD DIRECT SOLDER JACK
(FOR .141 SEMI-RIGID, RG-402/U)

DRAWING NO.
71628-6481A1-29-50

FILE NO. R:\D\G\DWG\71628\6481A1\29\50