REVISIONS		
ISS	ZONE	DESCRIPTION\PER REQUEST\DATE
B	A-1	NO.5 WAS CHANGED\RD-DM080604002\08-23-'19

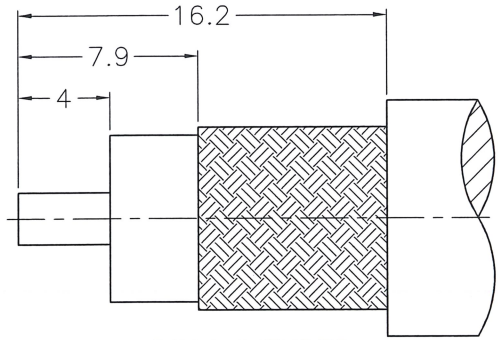

RECOMMENDED
CABLE STRIPPING DIM'S
(建議剝線尺寸)

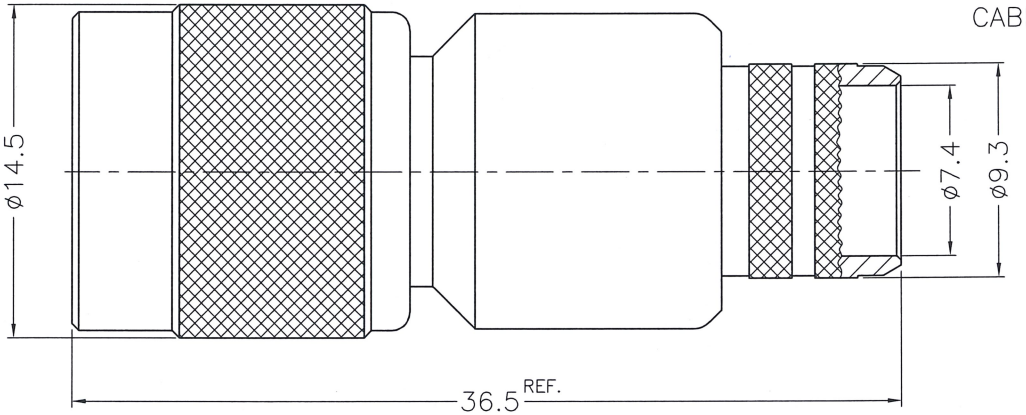

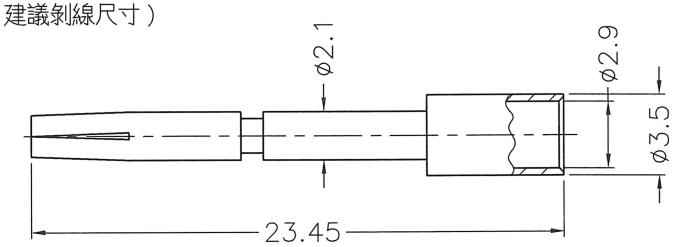

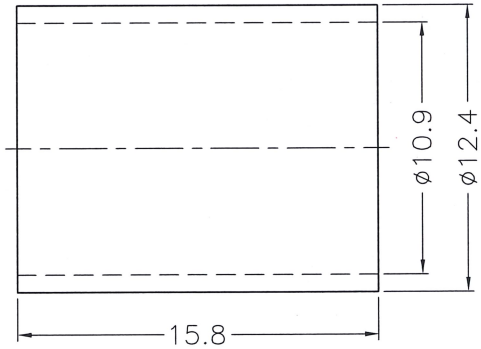

NOTES: FINISH (PLATING THICKNESS IN MICRO-INCHES)
1. BRASS
2. NICKEL PL. 100 MIN. THICK OVER COPPER PL. 50 MIN. THICK
3. PHOSPHOR BRONZE
4. GOLD PL. 3 MIN. THICK OVER NICKEL PL. 50 MIN. THICK OVER COPPER PL. 50 MIN. THICK
5. PTFE

1. CRIMPED FERRULE HEX. CRIMP SIZE .429"
2. CRIMPED CONTACT PIN HEX. CRIMP SIZE .118"

出圖 2023.6.20 設計部

RoHS COMPLIANT

NO.	DESCRIPTION	MATERIAL	FINISH	Q'TY	DRAWING NO.
10	FERRULE	NOTE 1	NOTE 2		
9	CONTACT PIN	NOTE 3	NOTE 4		
8	WASHER	NOTE 1	NOTE 2		
7	RING	POM	NATURAL		
6	RETAINER RING	NOTE 1	NOTE 2		
5	GASKET	SILICONE	RED		
4	BARREL	NOTE 1	NOTE 2		
3	INSULATOR	NOTE 5	NATURAL		
2	BODY	NOTE 1	NOTE 2		
1	SHELL	NOTE 1	NOTE 2		

DIMENSIONS ARE IN MILLIMETERS

UNLESS OTHERWISE SPECIFIED TOLERANCES
0.5-6 = ±0.2
6-30 = ±0.4
30-120 = ±0.6
120-315 = ±1
315-1000 = ±1.6
1000-2000 = ±2.4

SCALE 3/1 ISSUE B

PART NO. RPT-3959-L400

APPROVED Dark DATE 08-23-'19
CHECKED Angela DATE 08-23-'19
DRAWN Steven DATE 08-23-'19

G.L.I.

TITLE TNC REVERSE POLARITY CRIMP PLUG (FOR BELDEN 8214, 9913, LMR-400)

DRAWING NO. 71628RP-1121A6-17-50

FILE NO. R:\D\G\DWG\71628\RP\1121A6\17\50-B