REVISIONS		
ISS	ZONE	DESCRIPTION\PER REQUEST\DATE
B	E-6	NO.4 WAS ADDED A CHAMFER\RD-DM050307001\03-07-'16

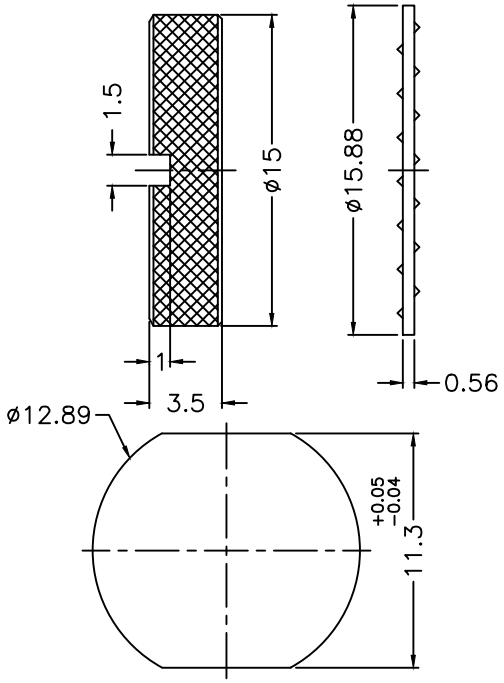

RECOMMENDED
MOUNTING HOLE
(建議架設孔)

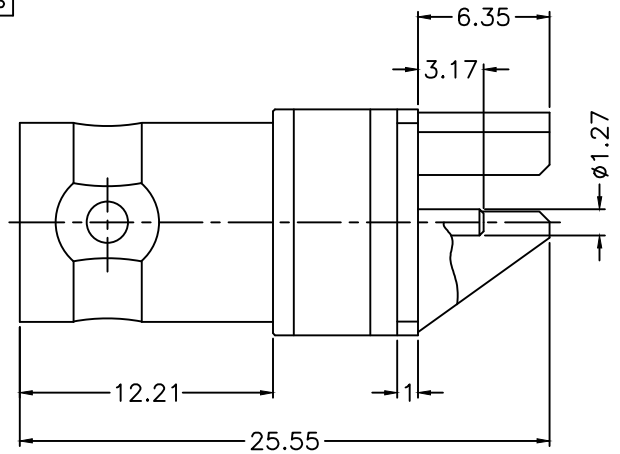

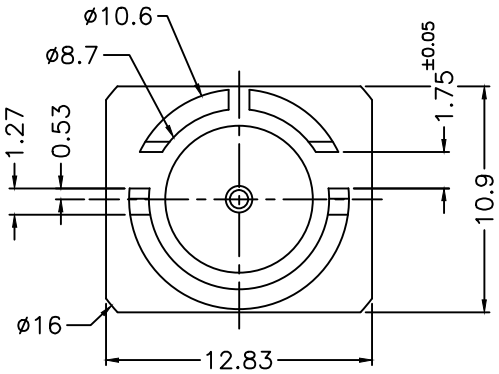

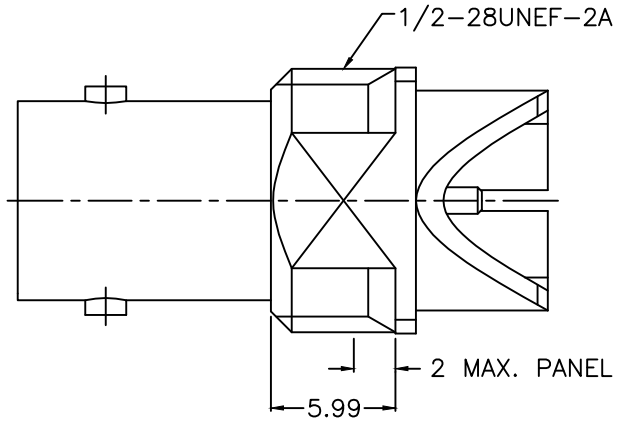

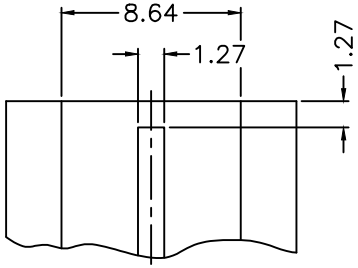

RECOMMENDED
PCB LAYOUT

NOTES: FINISH (PLATING THICKNESS IN MICRO-INCHES)
1. BRASS
2. GOLD PL. 3 MIN. THICK OVER NICKEL PL. 50 MIN. THICK OVER COPPER PL. 50 MIN. THICK
3. TEFLON
4. PHOSPHOR BRONZE
5. NICKEL PL. 100 MIN. THICK OVER COPPER PL. 50 MIN. THICK
6. GOLD PL. 1 MIN. THICK OVER NICKEL PL. 50 MIN. THICK OVER COPPER PL. 50 MIN. THICK

RoHS COMPLIANT

NO.	DESCRIPTION	MATERIAL	FINISH	Q'TY	DRAWING NO.
6	HEX NUT	NOTE 1	NOTE 5	1	NUT-1228-35
5	LOCK WASHER	NOTE 1	NOTE 5	1	LW-13-16-05
4	HOUSING	NOTE 1	NOTE 6	1	900-6351S1-4
3	CONTACT PIN	NOTE 4	NOTE 2	1	900-6351S1-3
2	INSULATOR	NOTE 3	NATURAL	1	900-6351S1-2 -75T
1	BODY	NOTE 1	NOTE 6	1	900-6351S1-1

DIMENSIONS ARE IN MILLIMETERS

UNLESS OTHERWISE SPECIFIED TOLERANCES
0.5-6 = ±0.2
6-30 = ±0.4
30-120 = ±0.6
120-315 = ±1
315-1000 = ±1.6
1000-2000 = ±2.4

SCALE	3/1	ISSUE	B

PART NO.

APPROVED	DATE 03-07-'16
CHECKED	DATE 03-07-'16
DRAWN	DATE 03-07-'16

G.L.I.

TITLE
BNC END LAUNCH RECEPT. JACK

DRAWING NO. 900-6351S6-75T

FILE NO. R:\D\G\DWG\900\6351S6\75T